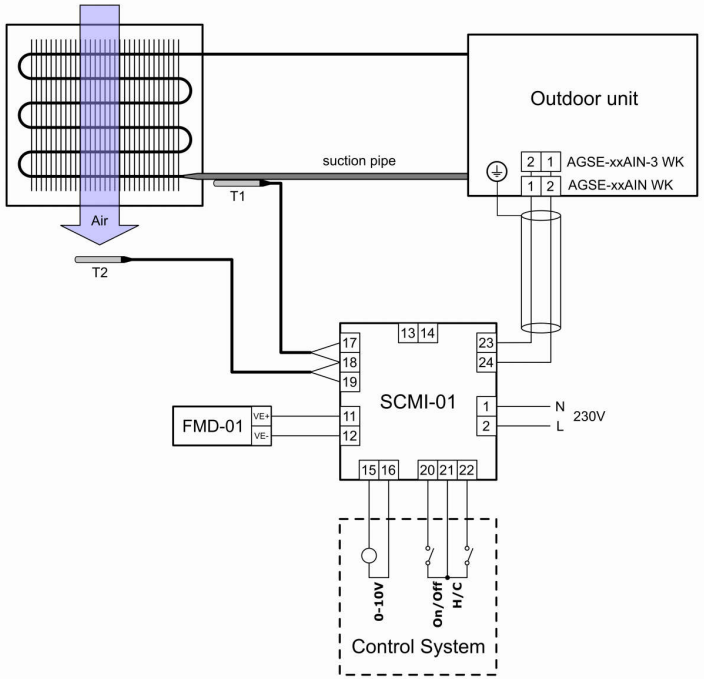
Outdoor unit
suction pipe
AGSE-xxAIN-3 WK
AGSE-xxAIN WK
Air
T1
T2
SCMI-01
FMD-01
VE+
VE-
N
L
230V
0-10V
On/Off
H/C
Control System

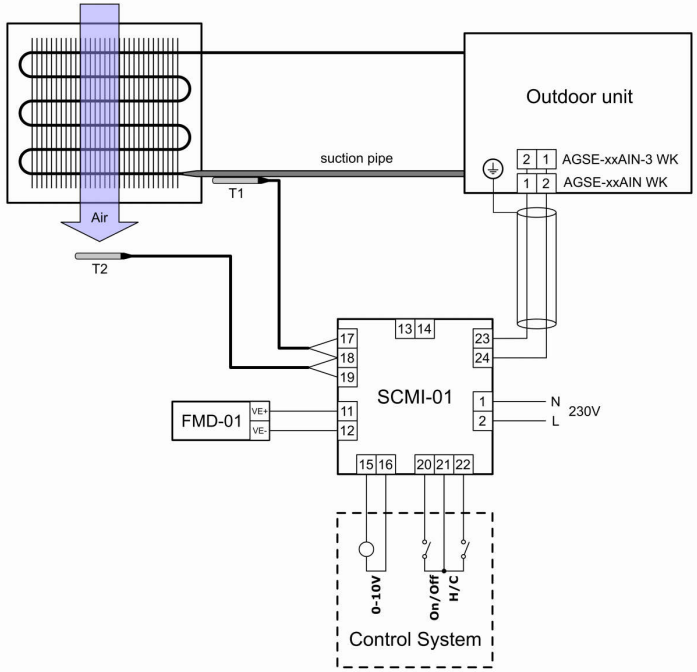
Outdoor unit
suction pipe
AGSE-xxAIN-3 WK
AGSE-xxAIN WK
Air
T1
T2
SCMI-01
FMD-01
VE+
VE-
N
L
230V
0-10V
On/Off
H/C
Control System

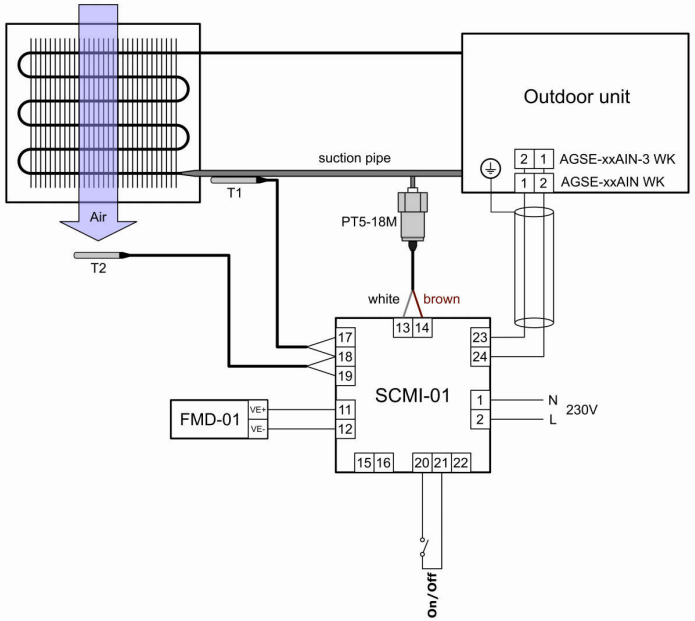
Outdoor unit
suction pipe
AGSE-xxAIN-3 WK
AGSE-xxAIN WK
Air
T1
T2
PT5-18M
white
brown
SCMI-01
FMD-01
VE+
VE-
N
L
230V
On/Off